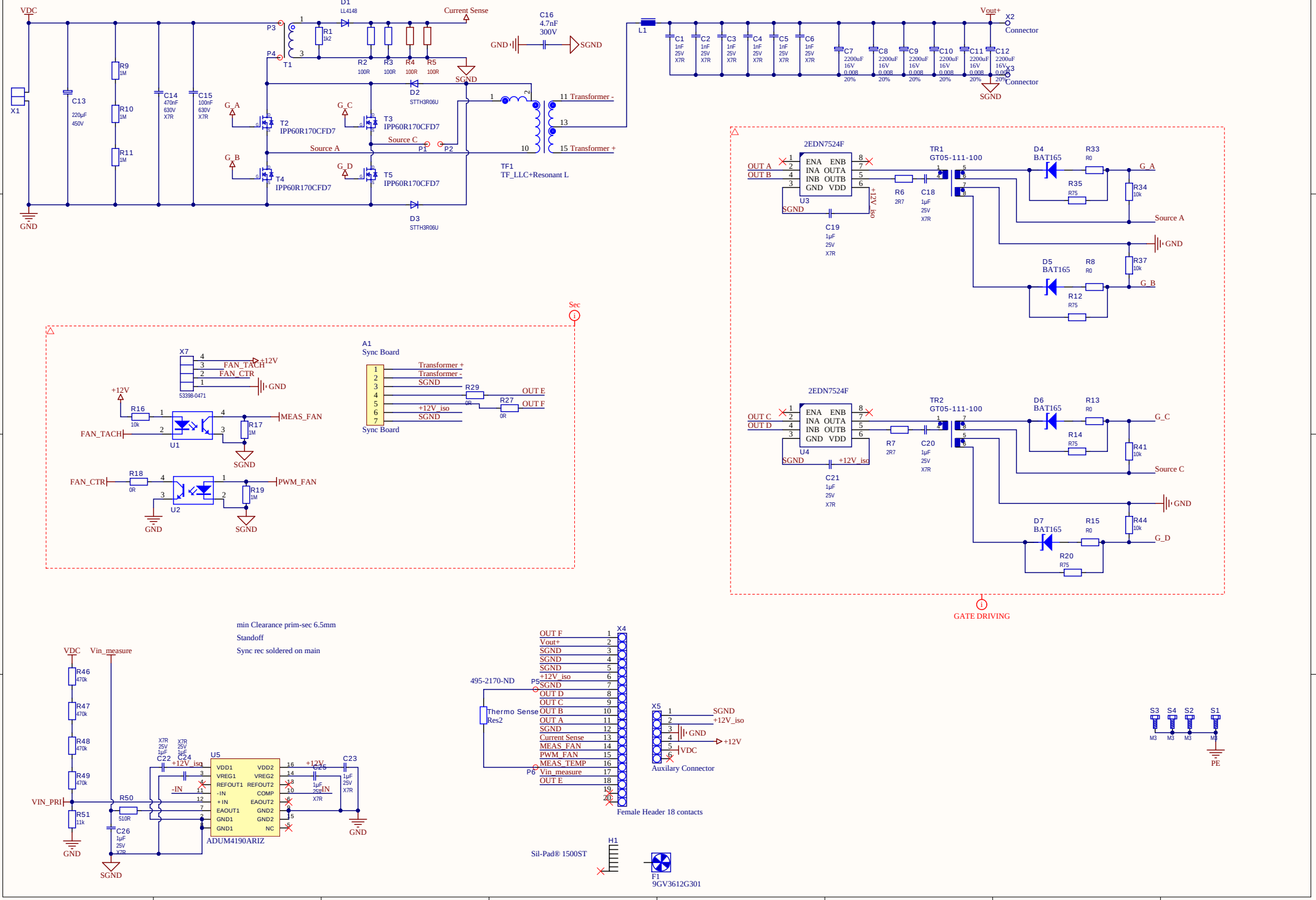
VDC
X1
C13
220µF
450V
R9
1M
R10
1M
R11
1M
C14
470nF
630V
X7R
C15
100nF
630V
X7R
GND
D1
LL4148
Current Sense
P3
P4
T1
R1
1k2
R2
100R
R3
100R
R4
100R
R5
100R
SGND
C16
4.7nF
300V
GND
SGND
D2
STTH3R06U
D3
STTH3R06U
G_A
G_B
G_C
G_D
T2
IPP60R170CFD7
T3
IPP60R170CFD7
T4
IPP60R170CFD7
T5
IPP60R170CFD7
Source A
Source C
P1
P2
TF1
TF_LLC+Resonant L
11 Transformer -
13
15 Transformer +
L1
C1
1nF
25V
X7R
C2
1nF
25V
X7R
C3
1nF
25V
X7R
C4
1nF
25V
X7R
C5
1nF
25V
X7R
C6
1nF
25V
X7R
C7
2200uF
16V
0.008
20%
C8
2200uF
16V
0.008
20%
C9
2200uF
16V
0.008
20%
C10
2200uF
16V
0.008
20%
C11
2200uF
16V
0.008
20%
C12
2200uF
16V
0.008
20%
Vout+
X2
Connector
X3
Connector
SGND
2EDN7524F
OUT A
OUT B
ENA ENB
INA OUTA
INB OUTB
GND VDD
U3
SGND
+12V_iso
C19
1µF
25V
X7R
R6
2R7
C18
1µF
25V
X7R
TR1
GT05-111-100
D4
BAT165
R33
R0
R35
R75
R34
10k
G_A
Source A
GND
D5
BAT165
R8
R0
R37
10k
G_B
R12
R75
Sec
X7
FAN_TACH
+12V
FAN_CTR
GND
5339B-0471
+12V
R16
10k
FAN_TACH
MEAS_FAN
U1
R17
1M
SGND
FAN_CTR
R18
0R
PWM_FAN
U2
R19
1M
GND
SGND
A1
Sync Board
Transformer +
Transformer -
SGND
+12V_iso
SGND
R29
0R
R27
0R
OUT E
OUT F
Sync Board
2EDN7524F
OUT C
OUT D
ENA ENB
INA OUTA
INB OUTB
GND VDD
U4
SGND
+12V_iso
C21
1µF
25V
X7R
R7
2R7
C20
1µF
25V
X7R
TR2
GT05-111-100
D6
BAT165
R13
R0
R14
R75
R41
10k
G_C
Source C
GND
D7
BAT165
R15
R0
R44
10k
G_D
R20
R75
GATE DRIVING
min Clearance prim-sec 6.5mm
Standoff
Sync rec soldered on main
VDC
Vin_measure
R46
470k
R47
470k
R48
470k
R49
470k
VIN_PRI
R50
510R
R51
11k
GND
SGND
C22
X7R
25V
1µF
C24
X7R
25V
1µF
+12V_iso
C26
1µF
25V
X7R
U5
VDD1
VREG1
REFOUT1
-IN
+IN
EAOUT1
GND1
GND1
VDD2
VREG2
REFOUT2
COMP
EAOUT2
GND2
GND2
NC
ADUM4190ARIZ
+12V
C25
1µF
25V
X7R
-IN
C23
1µF
25V
X7R
GND
495-2170-ND
P5
P6
Thermo Sense
Res2
X4
OUT F
Vout+
SGND
SGND
SGND
+12V_iso
SGND
OUT D
OUT C
OUT B
OUT A
SGND
Current Sense
MEAS_FAN
PWM_FAN
MEAS_TEMP
Vin_measure
OUT E
Female Header 18 contacts
X5
SGND
+12V_iso
GND
+12V
VDC
Auxilary Connector
S3
S4
S2
S1
M3
PE
Sil-Pad® 1500ST
H1
F1
9GV3612G301